RADIO SERVICE BULLETIN

Issue: No. 79
Date of Issue: October, 1951
Subject: Model D5212

SPECIFICATION OF S.T.C. MODEL D5212

CIRCUIT: Five valve dual wave A.C. or D.C. operated Superheterodyne, using converter, one stage of I.F. amplification, detector-audio stage, power output stage, and H.T. rectifier, A.V.C., inverse feedback, continuously variable tone control.

TUNING RANGE:
Broadcast 530—1620 Kc/s.
Short Wave 5.9—18.2 Mc/s.

INTERMEDIATE FREQUENCY:
455 Kc/s.

VALVE COMPLEMENT:
V1 Frequency changer 12K8-GT.
V2 I.F. Amplifier 12K7-GT.
V3 Detector-Audio 12Q7-GT.
V4 Power output 35L6-GT.
V5 H.T. Rectifier 35Z4-GT.

POWER SUPPLY:
200-240 volts, A.C. or D.C.
Rating: 260 M.A. at 240 volts.

LOUD SPEAKER:
9 x 6 inch Oval, 5000 Ohm transformer.

CIRCUIT VOLTAGES:

	Plate	Screen	Osc. Plate	Cathode	Heater
V1	200	115	85	4	12.6
V2	200	115	—	3	12.6
V3	65	—	—	1	12.6
V4	180	115	—	8	35.0
V5	240	—	—	240	35.0

These voltages must be measured to receiver earth with voltmeter having a resistance of at least 1000 ohms per volt (Tolerance ±5%). Volume control must be turned to maximum.

MEASUREMENT SPECIFICATION:
I.F. Sensitivity—V1 Grid 20 Microvolts.
I.F. Sensitivity—V2 Grid 2 Millivolts.
Broadcast Sensitivity 5 Microvolts Average.
Short Wave Sensitivity 20 Microvolts Average.
These figures are related to an audio frequency output of 14 volts measured between plate of V4 and chassis through a series condenser of .1 MFD Capacity.

ALIGNMENT FREQUENCIES:
Broadcast 1400 Kc/s. and 600 Kc/s.
Short Wave 16 Mc/s. and 6 Mc/s.

CHECK POINTS:
Broadcast 1000 Kc/s.
Short Wave 10 Mc/s.

MODEL D 5212

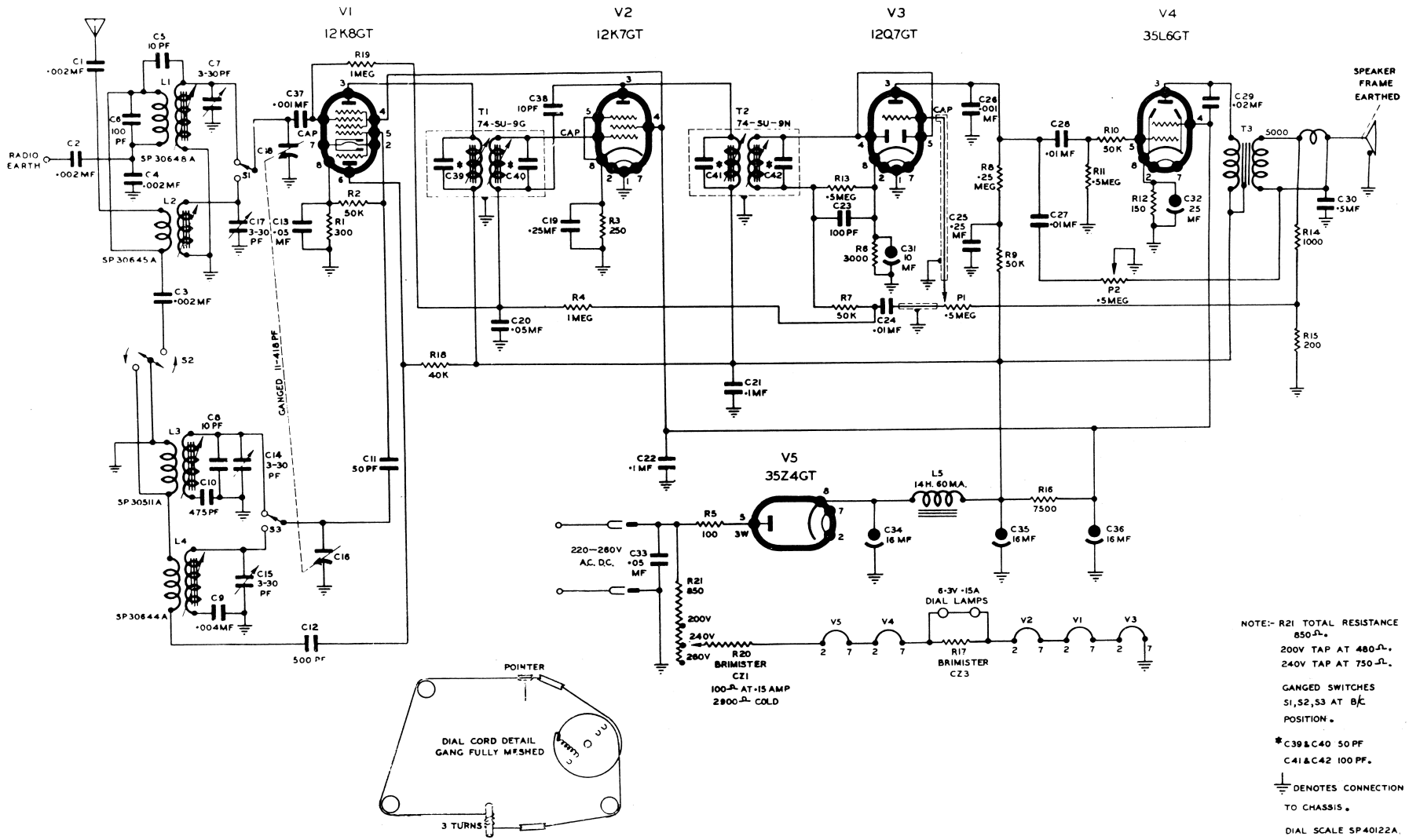

NOTE:- R21 TOTAL RESISTANCE 850Ω.
200V TAP AT 480Ω.
240V TAP AT 750Ω.

GANGED SWITCHES S1, S2, S3 AT B/C POSITION.

*C39 & C40 50 PF
C41 & C42 100 PF.

⏚ DENOTES CONNECTION TO CHASSIS.

DIAL SCALE SP40122A.